www.artize.com

Artize

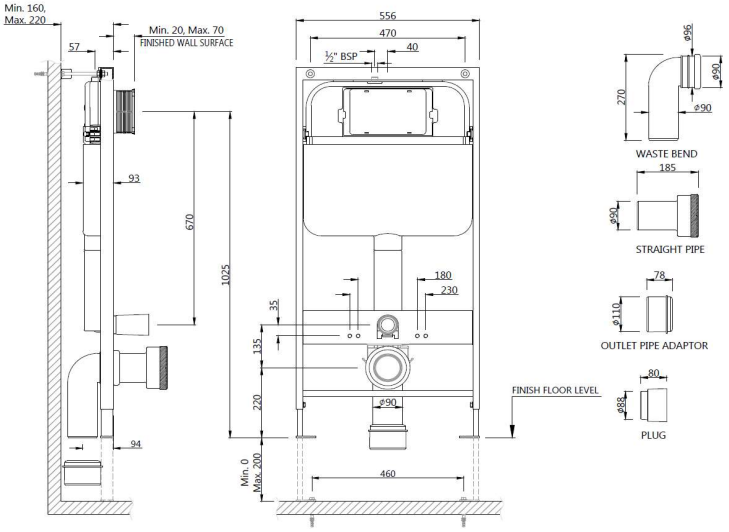


| | |
|---|---|
| **Product Code** | APC-WHT-5012500FSAF |
| **Description** | Pneumatic Single Piece Slim In-wall Cistern With Auto Flushing System, Floor Mounting Frame, Installation Kit And “S-Type” Drain Pipe Connection Set For Wall Hung Wc (Without Control Plate) Compatible With Wc : IAS-79953BIPP ( Sold As Seperate ) |
| **Flow Rate** | 3.0/6.0 LPF |
| **Features** | • **Tank body:** Strong 80 mm thick High-density polyethylene (HDPE) ‘Single-piece’ body.<br>• **Anti-Condensation Lining:** Anti condensation lining of 6mm thick wall takes care of temperature change.<br>• **Inlet & Outlet Valves:** Inlet valve has a special rotary structure which gives out low noise & anti siphon function. Both valves (Inlet & outlet) are WARS approved.<br>• **Working Pressure:** 0.3-10 bar (1.0 to 3.0 bar is recommended with clear, non-aggressive water supply)<br>• **Life Cycles of Mechanism:** The lifetime of sea water test and dirty water test have passed 100,000 cycles<br>• **Flush Control Plates:** Toughened glass with ABS made chome plated push buttons of control plates which is compatible for Single Piece Slim in-wall Cistern (APC-WHT-5012500FSAF)<br>• **Adjustable Height:** Adjustable legs (0-200 mm) to allow for variation in heights of WC, as required<br>• **Floor Mounted Frame:** oxford blue Powder coated steel frame, self-supporting test on 400Kg |
| **Application** | • For installation of a wall-hung WC with bolt fixing set at 180 or 230 mm centres<br>• For installation in a room high system well in front of a solid or drywall construction.<br>• For installation in a load bearing stud wall. |

DISCLAIMER: Our every effort has been made to ensure factual accuracy, the information presented subject to changes due to requirements in different sites, markets and/ or countries. 10% variation in flow rate may be possible. Jaquar reserves the right to make the necessary amendments at any time without prior notice.